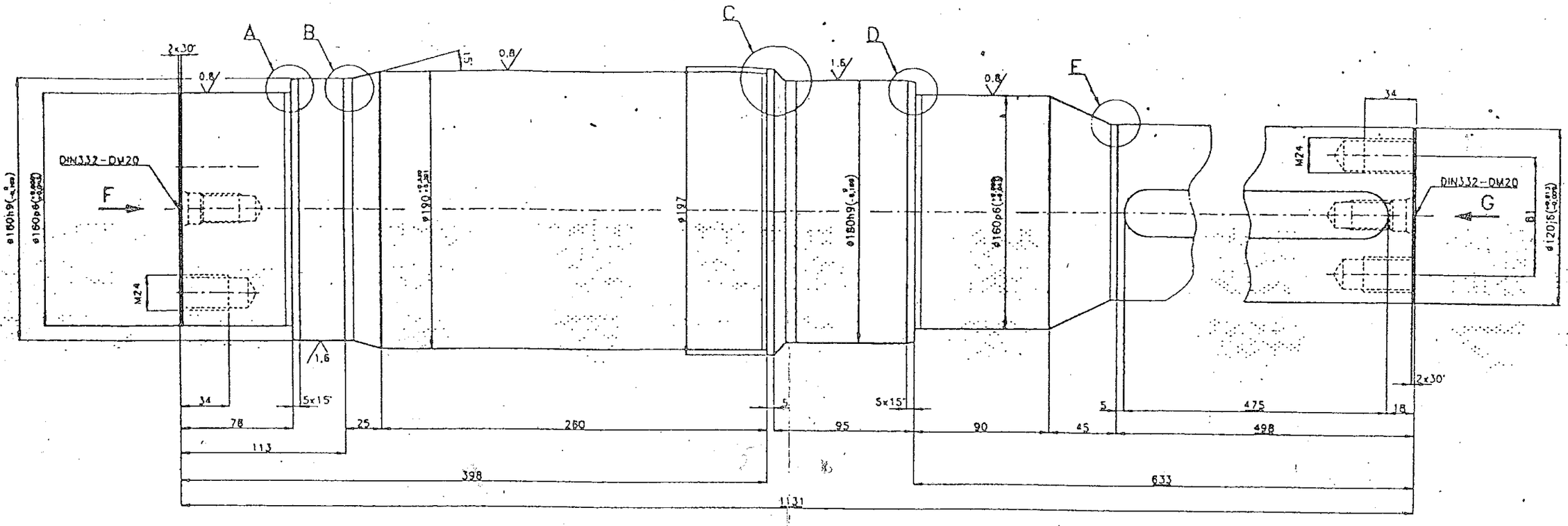

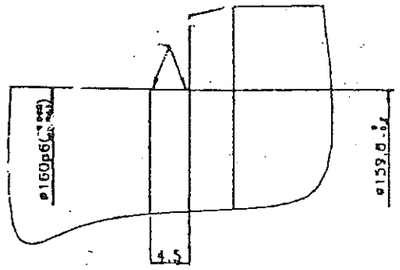

DETAIL A
SCALE 2:1

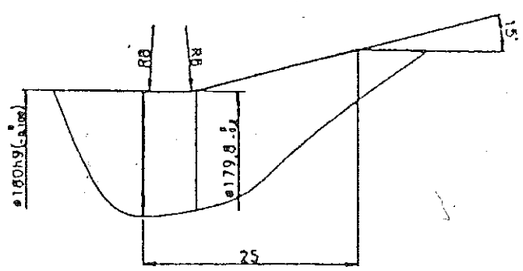

DETAIL B
SCALE 2:1

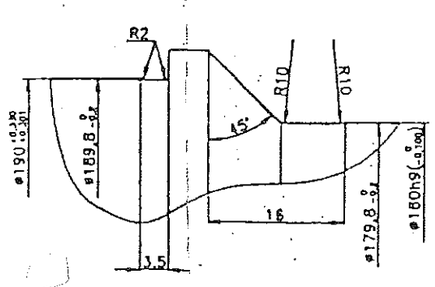

DETAIL C
SCALE 2:1

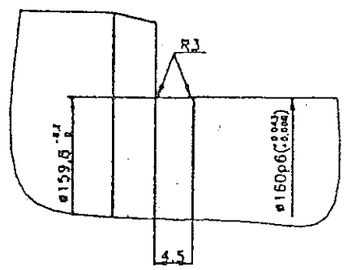

DETAIL D
SCALE 2:1

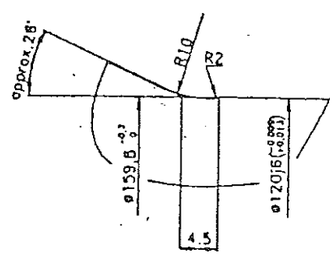

DETAIL E
SCALE 2:1

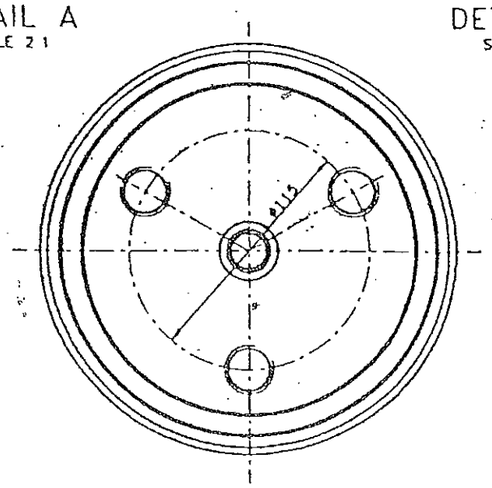

VIEW F

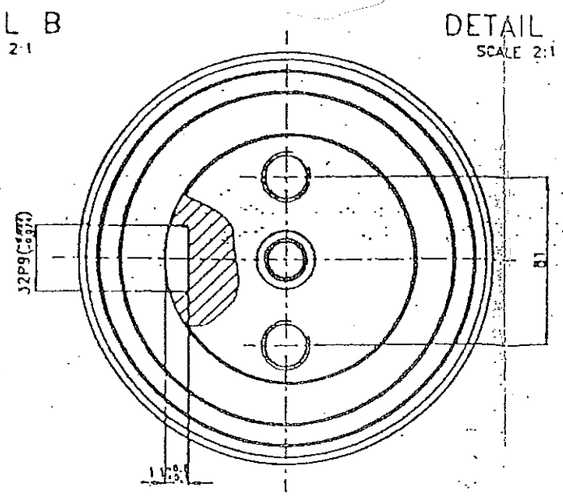

VIEW G

3.2

INDEX	DATE	NAME	DESCRIPTION

CUSTOMER: T.P.A.

PROJECT: 585 - 2 Post Panamax Crane

OBJECT: WHEEL AXLE

C. ROKAS S.A.
46, PATISSION str. - 10682 ATHENS - GREECE
TEL. ++30(1)8817711-14, ++30(1)8817357, FAX ++30(1)8210445

1998/1997	DATE	NAME	SIGNATURE	SCALE
DRAWN BY	14/05/97	M. MARKOVA		1:2
CHECKED BY	20/05/97	A. MAZONAKIS		2:1
APPROVED	20/06/97	V. CHRISTODOUL		

FILE | SIZE A1

MATERIAL 34CrNiMo6

WEIGHT 165kg/pc

DRAWING No 585 2400 M313148

REPLACES | REPLACED BY